MALE END VIEW (P1)

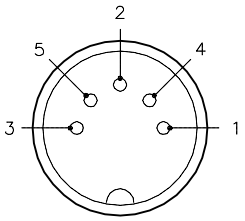

1=BROWN
2=WHITE
3=BLUE
4=BLACK
5=GREY

M16 connector

FEMALE END VIEW (J1–J3)

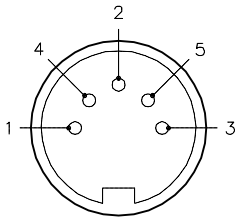

1=BROWN
2=WHITE
3=BLUE
4=BLACK
5=GREY

M16 connector

WIRING DIAGRAM

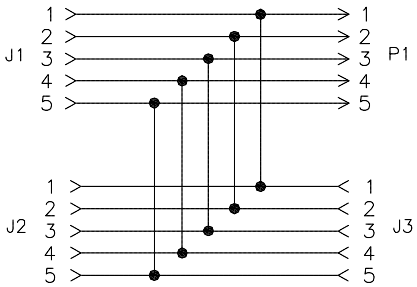

SPECIFICATIONS

CONTACT CARRIER MATERIAL	TPU
MOLDED BODY MATERIAL/COLOR	TPU/YELLOW
CONTACT MATERIAL/PLATING	BRASS/GOLD
COUPLING NUT MATERIAL/PLATING	BRASS/NICKEL
RATED CURRENT [A]	8.0 A
RATED VOLTAGE [V]	125 VAC/VDC
OUTER JACKET MATERIAL/COLOR	PVC/YELLOW
CONDUCTOR INSULATION MATERIAL	PVC
NUMBER OF CONDUCTORS [AWG]	5x18 AWG
TEMPERATURE RANGE	−40°C TO +105°C (−40°F TO +221°F)
PROTECTION CLASS	MEETS IEC IP67

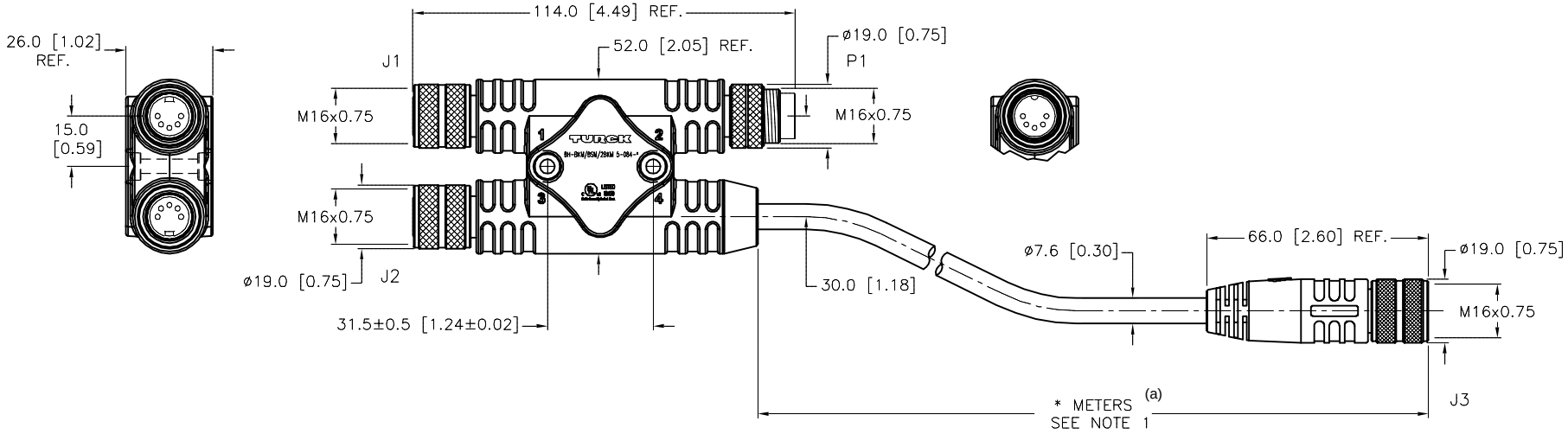

CABLE LENGTH	TOLERANCE *
ALL LENGTHS	+ 4% (OR 50mm) OF LENGTH − 0% (OR 0mm) OF LENGTH WHICHEVER IS GREATER
STRIP LENGTH	**TOLERANCE ***
0–7mm	±0.5mm
8–29mm	±1.0mm
30–49mm	±2.0mm
50–69mm	±3.0mm
70–100mm	±4.0mm
OVER 100mm	±5.0mm
* UNLESS OTHERWISE SPECIFIED	

NOTES:

1. "*" INDICATES CABLE LENGTH IN METERS. CONTACT TURCK TO ORDER SPECIFIC LENGTHS.

SOURCE DRAWING - FOR REFERENCE ONLY

REV	DESCRIPTION	BY	DATE	ECO NO.
D	UPDATE CLICHE	KMY	03/27/13	41196

RELATED DOCUMENTS
1.
2.
3.
4.

3RD ANGLE PROJECTION

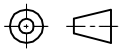

THIS DRAWING IS CONFIDENTIAL AND THE PROPERTY OF TURCK INC. USE OF THIS DOCUMENT WITHOUT WRITTEN PERMISSION IS PROHIBITED.

TURCK INC
High Technology Sensors and Automation Controls

3000 CAMPUS DRIVE
MINNEAPOLIS, MN 55441
1-800-544-7769
(763) 553-7300
(763) 553-0708 fax
turck.com

MATERIAL: SEE SPECIFICATIONS

FINISH: SEE SPECIFICATIONS

ALL DIMENSIONS DISPLAYED ON THIS DRAWING ARE FOR REFERENCE ONLY

CONTACT TURCK FOR MORE INFORMATION

DRFT: RDS | DATE: 08/19/08
APVD: | SCALE: 1=2.0

UNIT OF MEASUREMENT
MILLIMETERS

DO NOT SCALE THIS DRAWING

DESCRIPTION: BH-BKM/BSM/2BKM 5-084-* (a)

IDENTIFICATION NO.:

REV: D

FILE: 777022630

SHEET 1 OF 1